FHP-470 | Air Conditioner/Heat Exchanger

Air Cooled
Flush Mounted
Nema-4, 4X

24 VDC
260 BTU/HR



FEATURES

- Compact (only 10" X 5.86" X 7.97")
- Mounts and operates in any orientation: horizontal, vertical, etc
- Low vibration and noise
- No moving parts except fans
- Environmentally safe
- No compressor, fluorocarbons or filters
- Virtually maintenance-free operation
- Stainless steel exterior housing
- Efficient heat exchanger mode (ECO-Mode)
- Weight 16 LBS.

CONTROL TEMPERATURES

Active Cooling	35 °C
Heat Exchanger (ECO-Mode)	25 °C
Active Heating	10 °C
Typical Hysteresis	5 °C
Operating Ambient	-40/+70 °C
Operating Enclosure	-10/+60 °C

POWER INPUTS

Voltage	24 VDC
Current, Active	7.0 AMPS
Current, ECO-Mode	0.3 AMPS

PERFORMANCE RATINGS

Cooling (Traditional)	259 BTU/HR
Cooling (Din 3168)	80 WATTS
Cooling COP (at L35 L35)	0.48
Heating (Traditional)	> 572 BTU/HR
Heating (Din 3168)	> 168 WATTS
Heating COP	> 1.0

INCLUDES

- Temperature controller
- Mounting gasket
- Mounting hardware
- Power input leads
- Power saving heat exchanger mode (ECO-Mode)

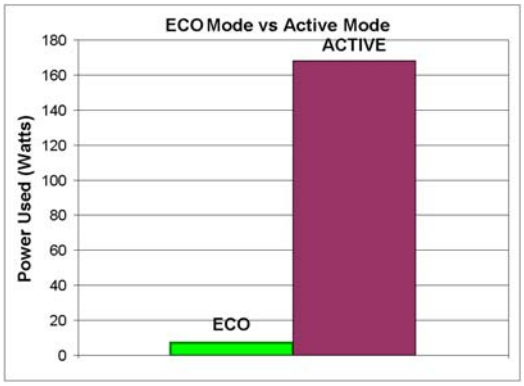

12 VDC configuration available

CONFIGURATIONS

MODEL	PART NUMBER	NOTES	TEMPERATURE CONTROL	ENVIRONMENT
FHP-470XE	7-F0J5-4-001	Cool only, sealed hot side fan	TC-4F	NEMA-4/4X, IP 56
FHP-470XEHC	7-F095-5-001	Heat/Cool, sealed hot side fan	None*	NEMA-4/4X, IP 56
FHP-470XEHC	7-F0I5-5-001	Heat/Cool, sealed hot side fan	TC-7F	NEMA-4/4X, IP 56
FHP-470X	7-F0J5-2-001	Cool only, Mil. grade hot side fan	TC-4F	NEMA-4X/Harsh, IP 56
FHP-470XHC	7-F095-3-001	Heat/Cool, Mil. grade hot side fan	None*	NEMA-4X/Harsh, IP 56
FHP-470XHC	7-F0I5-3-001	Heat/Cool, Mil. grade hot side fan	TC-7F	NEMA-4X/Harsh, IP 56

* For controller options contact TECA; Heating function via reverse polarity (controller dependent)

FHP-470

MOUNTING STYLE

Flush Mounted

ENVIRONMENTS SERVED

NEMA-4/4X IP 56

RATING (TRADITIONAL)

260 BTU/hr @ 0 °F ΔT

360 BTU/hr @ +20 °F ΔT

RATING (DIN 3168)

80 Watts L35 L35

40 Watts L35 L50

PERFORMANCE CURVE

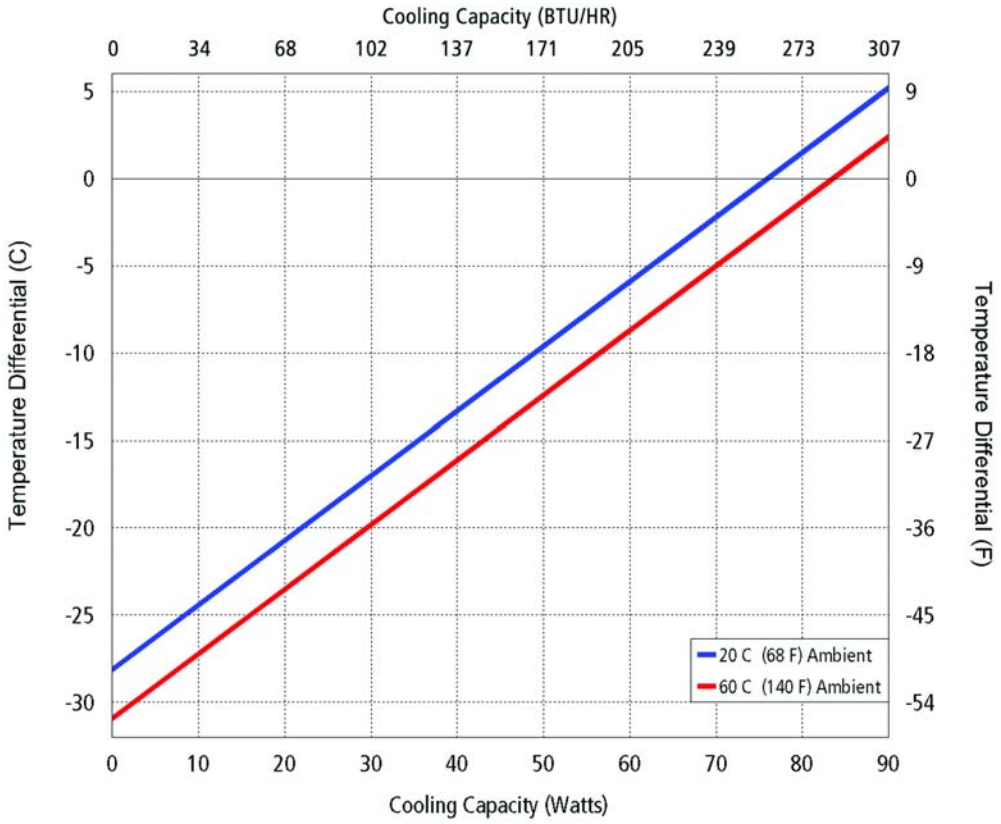

Equation of Line: y=ΔT(°C) x=Capacity (Watts)		
Ambient Temp	**20°C**	**60°C**
FHP-470	y=.37x-28.1	y=.37x-30.9

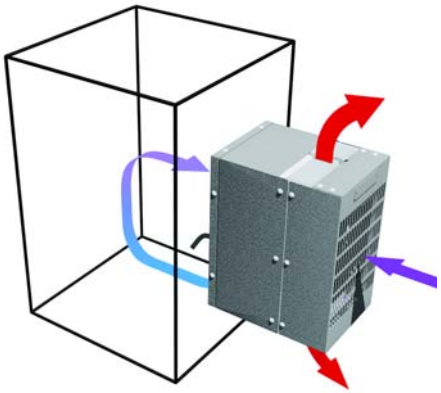

Air Flow Pattern

DIMENSIONS

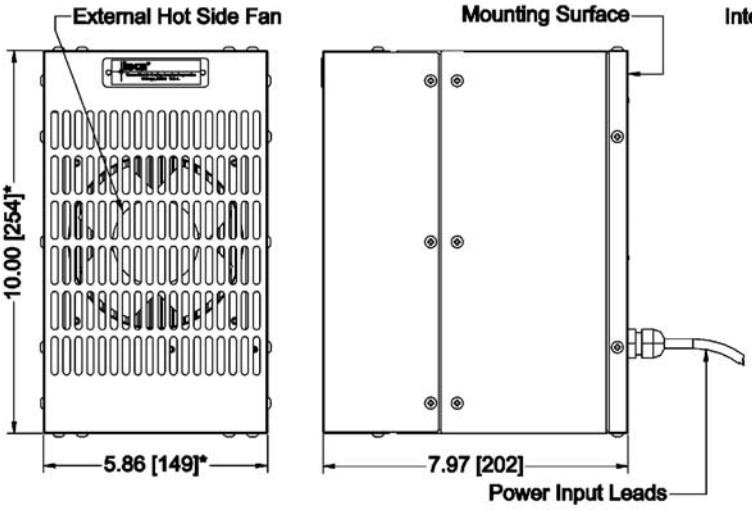

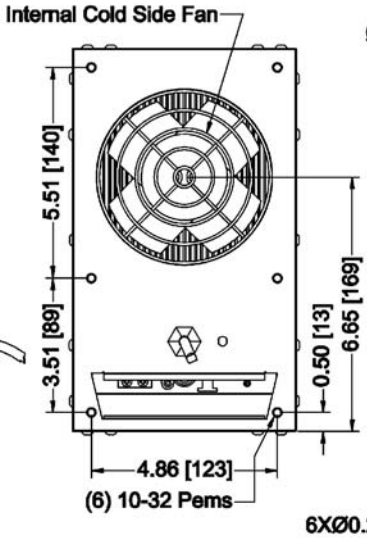

MOUNTING CUTOUT DIMENSIONS

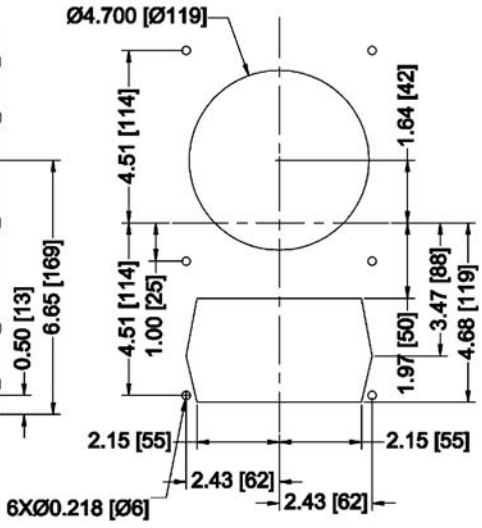

* Dimension does not include hardware and gasket
Mounting hardware and gasket included but not shown
Dimensions: Inches [Millimeters]